MPSA65M390,MPSP65M390,MPSU65M390, MPSD65M390, MPSY65M390

FEATURES

BV_{DSS}=650V, I_D=11A

$R_{DS(on)}$:0.39 (Max)@V_{GS}=10V

Very low FOM $R_{DS(on)} \times Q_g$

100% avalanche tested

RoHS compliant

Device Marking and Package Information		
Ordering code	**Package**	**Marking**
MPSA65M390	TO-220F	MP65M390
MPSP65M390	TO-220	MP65M390
MPSU65M390	TO-251	MP65M390
MPSD65M390	TO-252	MP65M390
MPSY65M390	DFN 8*8	MP65M390

Absolute			

Specifications T_J = 25ºC, unless otherwise noted						
Parameter	**Symbol**	**Test Conditions**	**Value**			**Unit**
			Min.	**Typ.**	**Max.**	
Static						
Drain-Source Breakdown Voltage	$V_{(BR)DSS}$	V_{GS} = 0V, I_D = 250μA	650	--	--	V
Zero Gate Voltage Drain Current	I_{DSS}	V_{DS} = 650V, V_{GS} = 0V, T_J = 25ºC	--	--	1	
		V_{DS} = 650V, V_{GS} = 0V, T_J = 150ºC	--	--	100	
Gate-Source Leakage	I_{GSS}	V_{GS} = ±30V	--	--	±100	nA
Gate-Source Threshold Voltage	$V_{GS(th)}$	V_{DS} = V_{GS}, I_D = 0.25mA	2.5	--	4.5	V
Drain-Source On-Resistance (Note3)	$R_{DS(on)}$	V_{GS} = 10V, I_D = 5.5A	--	0.34	0.39	
Gate Resistance	R_G	f = 1.0MHz, open drain	--	14	--	
Dynamic						
Input Capacitance	C_{iss}	V_{GS} = 0V, V_{DS} = 100V, f = 1.0MHz	--	797	--	pF
Output Capacitance	C_{oss}		--	30	--	
Reverse Transfer Capacitance	C_{rss}		--	4.2	--	
Total Gate Charge	Q_g	V_{DD} = 400V, I_D = 11A, V_{GS} = 10V	--	20	--	nC
Gate-Source Charge	Q_{gs}		--	4.2	--	
Gate-Drain Charge	Q_{gd}		--	7	--	
Turn-on Delay Time	$t_{d(on)}$	V_{DD} = 400V, I_D = 11A, V_{GS} = 10V, R_G = 25	--	41	--	ns
Turn-on Rise Time	t_r		--	20	--	
Turn-off Delay Time	$t_{d(off)}$		--	120	--	
Turn-off Fall Time	t_f		--	20	--	
Drain-Source Body Diode Characteristics						
Continuous Body Diode Current	I_S	T_C = 25ºC	--	--	11	A
Pulsed Diode Forward Current	I_{SM}		--	--	30	
Body Diode Voltage	V_{SD}	T_J = 25ºC, I_{SD} = 11A, V_{GS} = 0V	--	0.9	1.2	V
Reverse Recovery Time	t_{rr}	V_R = 400V, I_F = 11A, di_F/dt = 100A/	--	330	--	ns
Reverse Recovery Charge	Q_{rr}		--	3.5	--	
Peak Reverse Recovery Current	I_{rrm}		--	22	--	

marching-power© Copyright reserved

Typical Characteristics T_J = 25ºC, unless otherwise noted

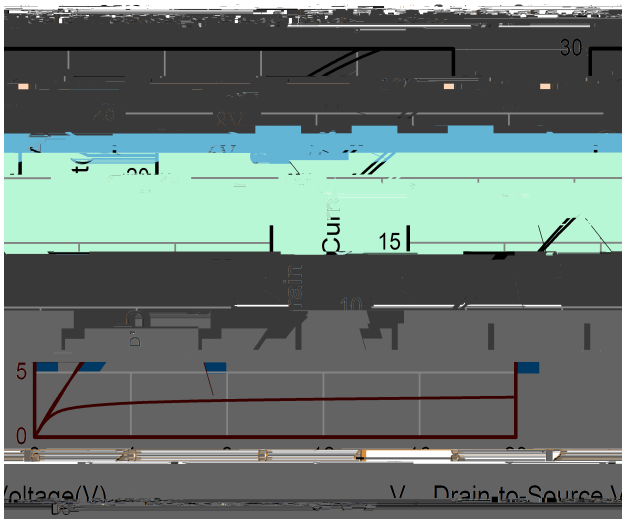

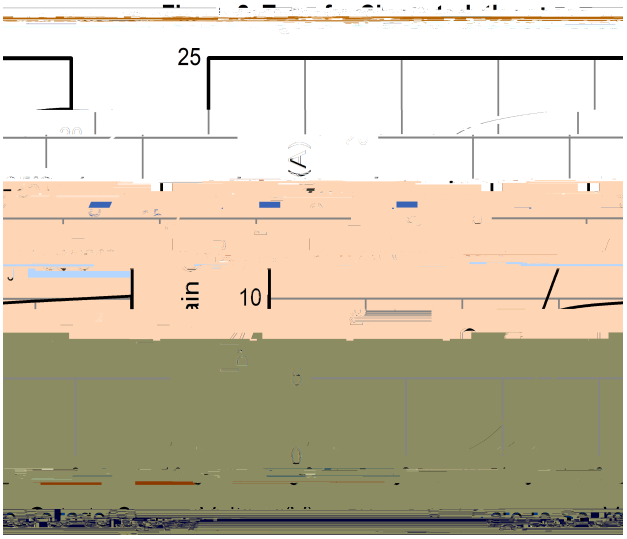

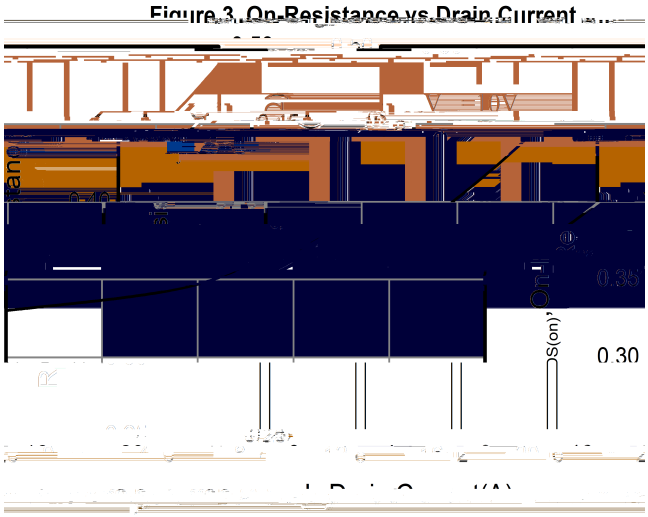

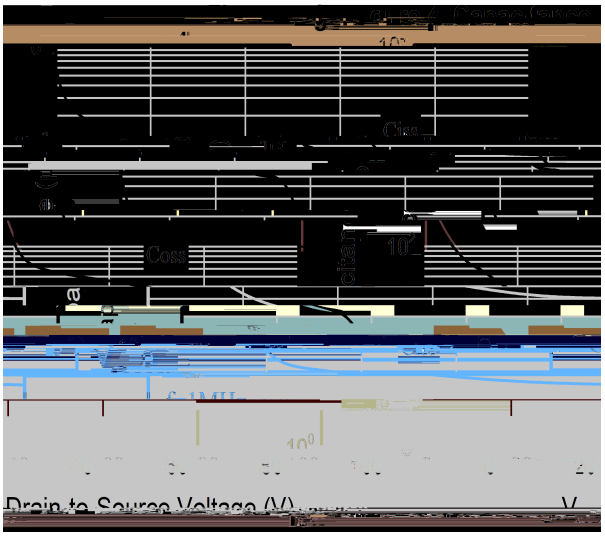

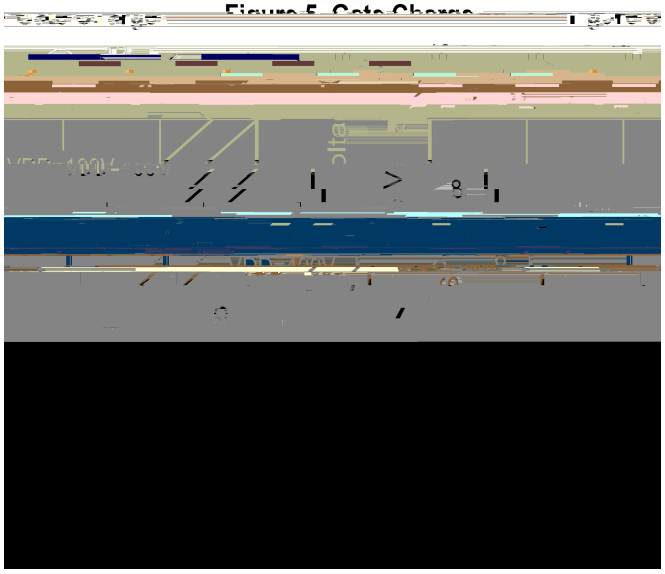

Figure 6. Body Diode Forward Voltage

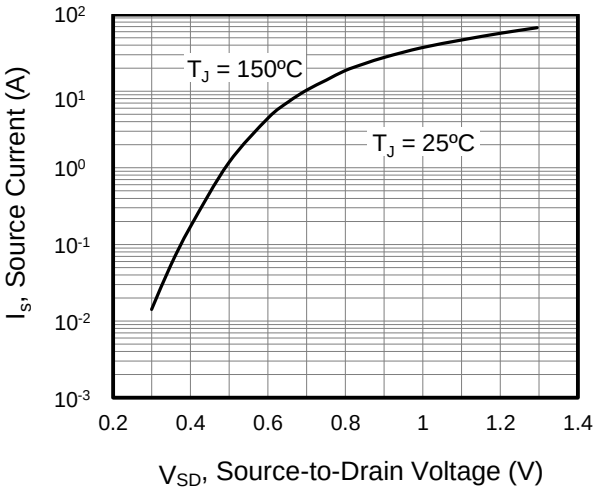

Figure A Gate Charge Test Circuit and Waveform

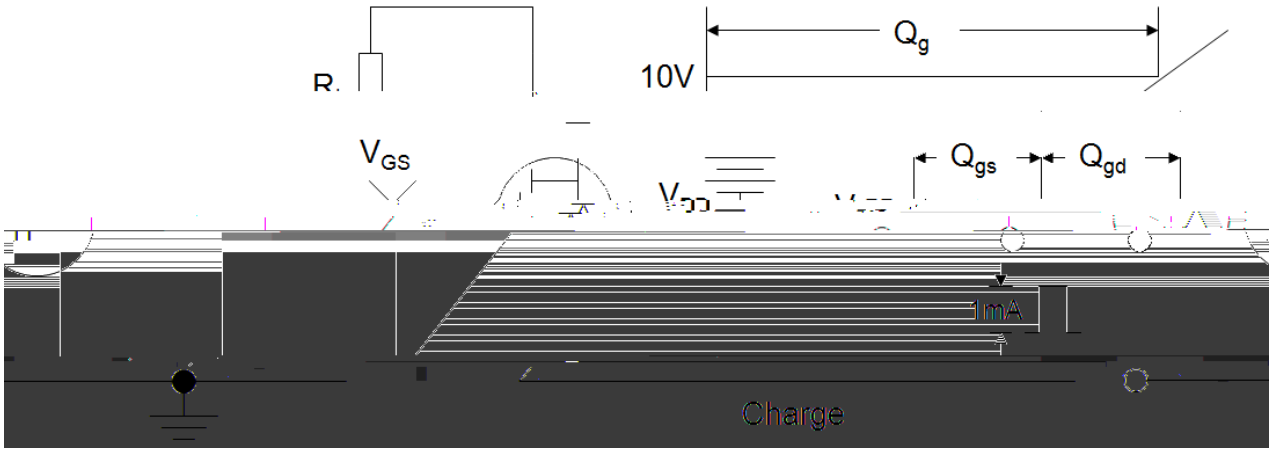

Figure B Resistive Switching Test Circuit and Waveform

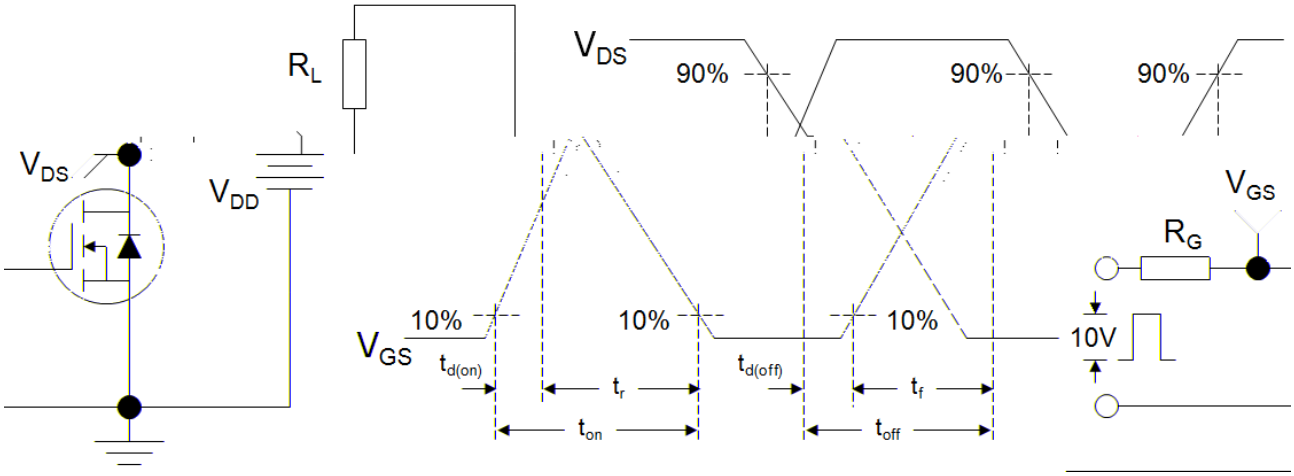

Figure C Unclamped Inductive Switching Test Circuit and Waveform

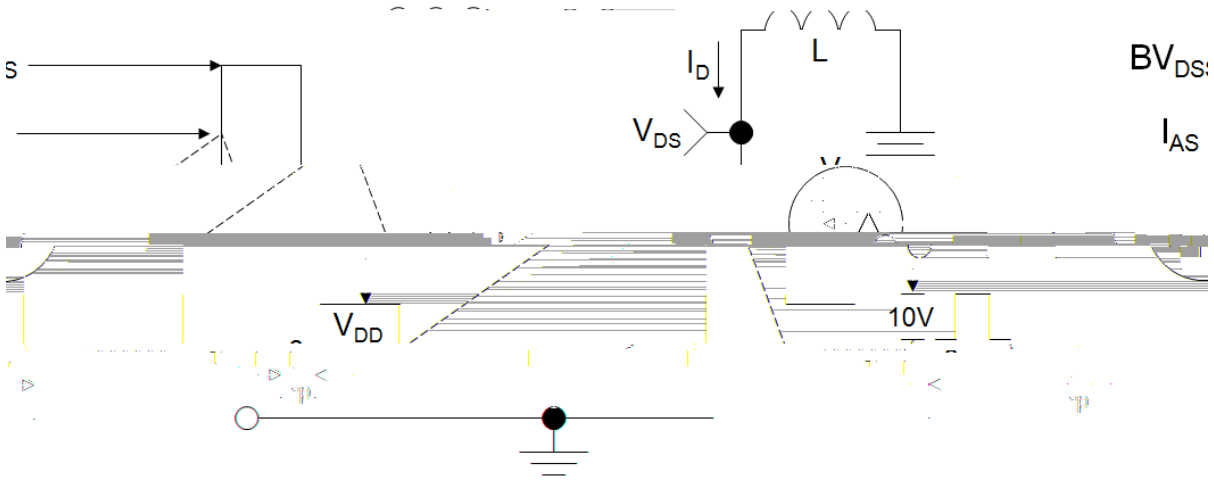

TO-220

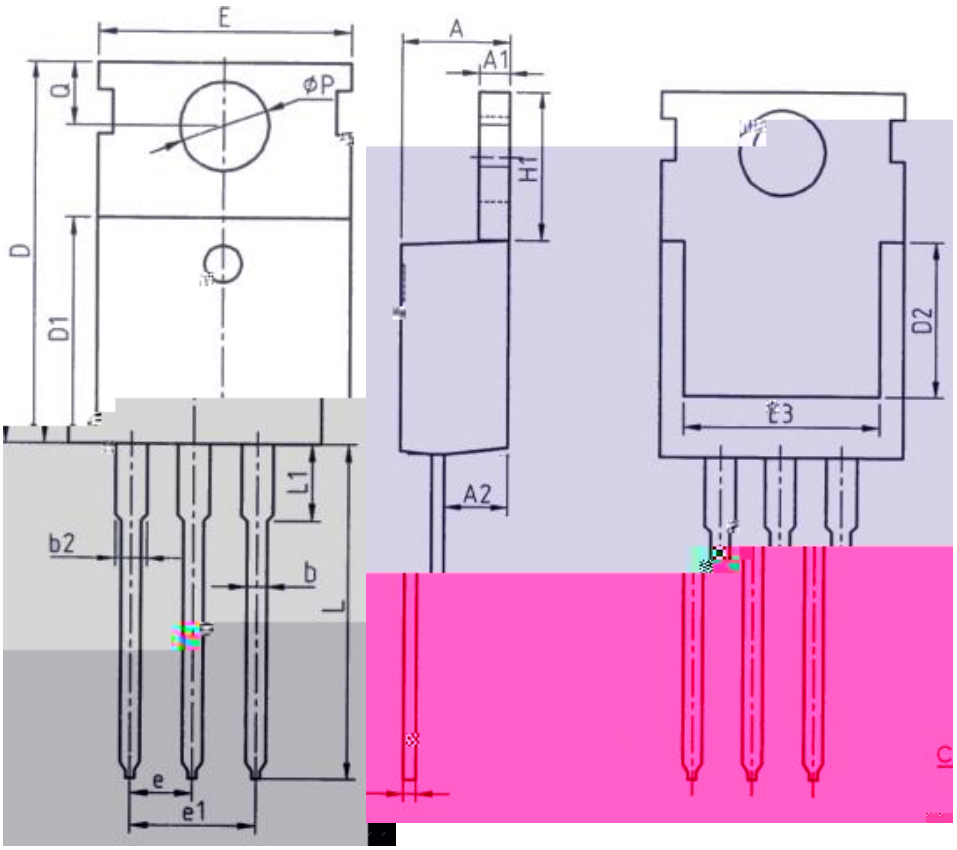

Unit: mm		
Symbol	Min.	Max.
A	4.37	4.77
A1	1.25	1.45
A2	2.20	2.60
b	0.70	0.95
b2	1.17	1.47
c	0.40	0.65
D	15.10	16.10
D1	8.80	9.40

TO-220F

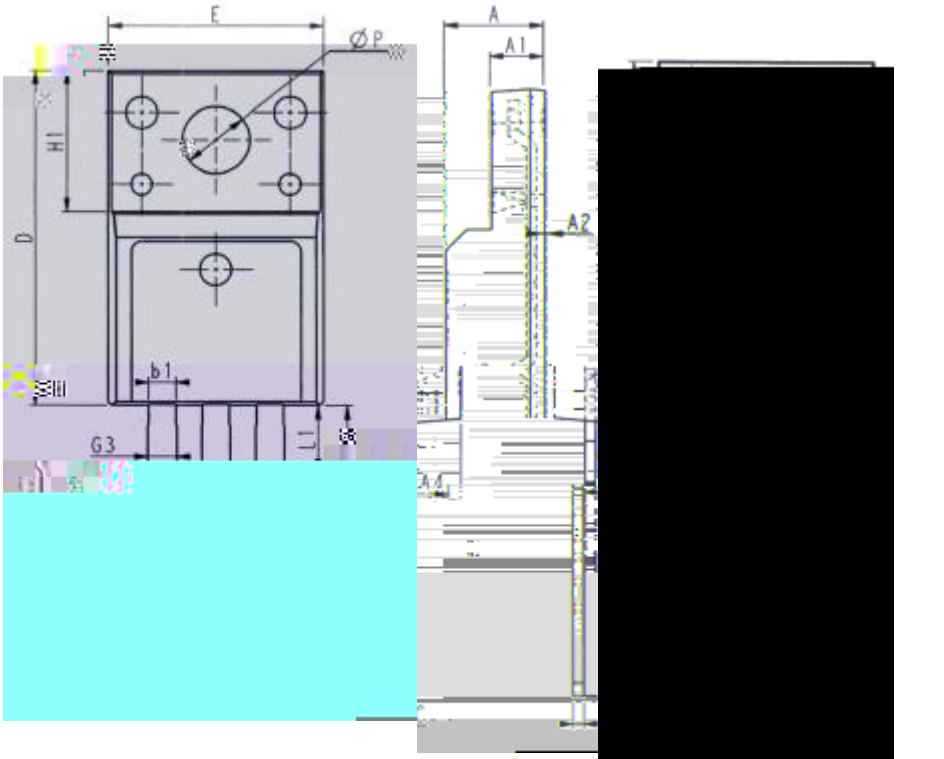

Unit: mm		
Symbol	Min.	Max.
E	9.96	10.36

TO-251

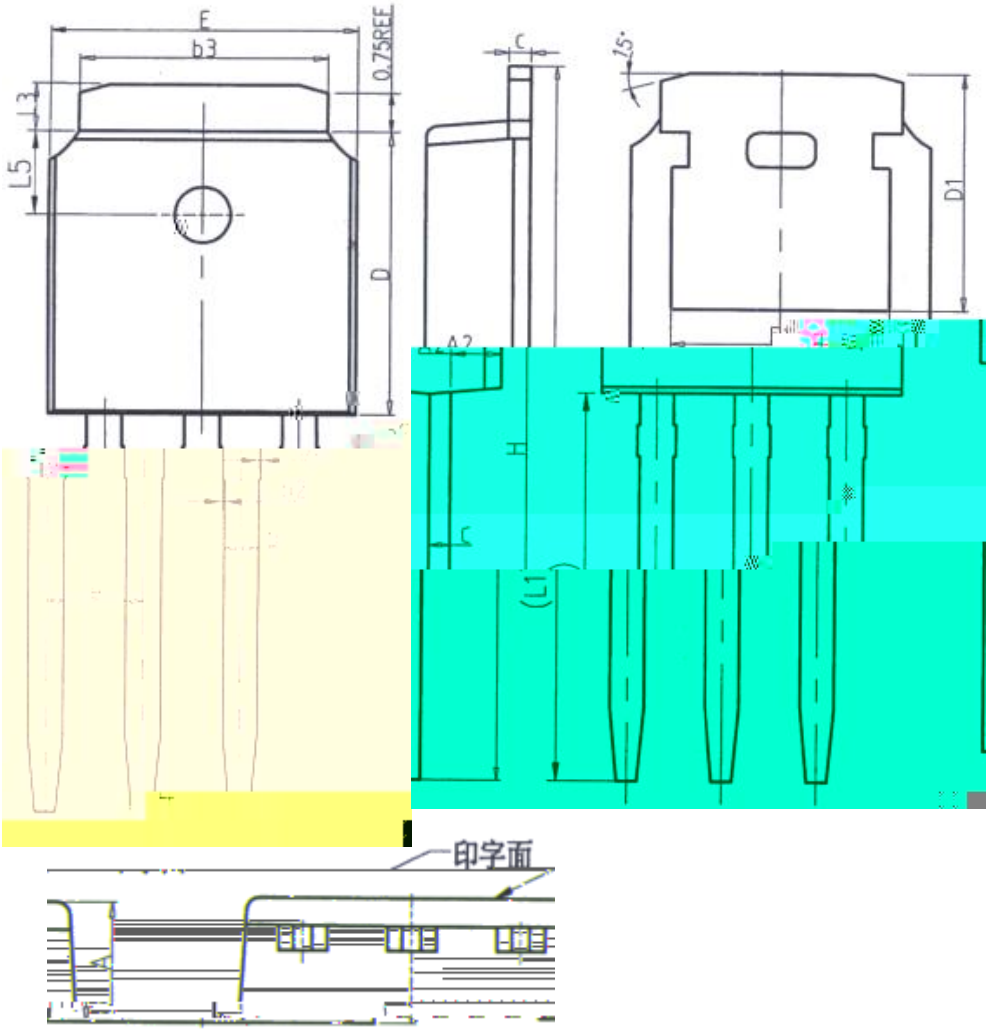

Unit: mm		
Symbol	Min.	Max.
A	2.20	2.40
[illegible]	[illegible]	[illegible]
[illegible]	[illegible]	[illegible]
[illegible]	[illegible]	[illegible]
[illegible]	[illegible]	[illegible]
[illegible]	[illegible]	[illegible]
[illegible]	[illegible]	[illegible]
[illegible]	[illegible]	[illegible]

Unit: mm		
Symbol	Min.	Max.
D1	5.30REF	
E	6.40	6.80
E1	4.63	-
e	2.286BSC	
H	16.22	16.82
L1	9.15	9.65
L3	0.88	1.28
L5	1.65	1.95

TO-252

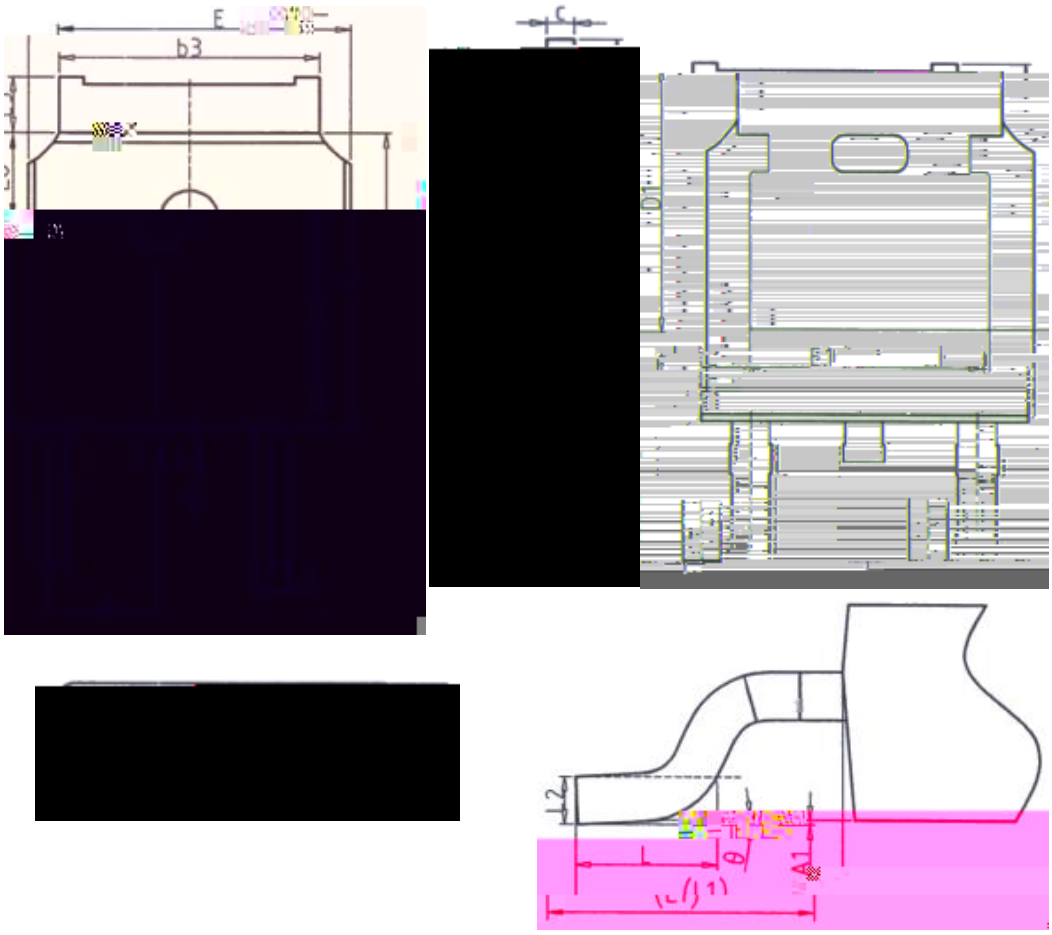

Unit: mm		
Symbol	Min.	Max.
A	2.20	2.40
A1	0.00	0.20
A2	0.97	1.17
b	0.68	0.90
b3	5.20	5.50
c	0.43	0.63
D	5.98	6.22
D1	5.30REF	
E	6.40	6.80
E1	4.63	–

Unit: mm		
Symbol	Min.	Max.
e	2.286BSC	
H	9.40	10.50
L		
L1		
θ		

DFN 8x8

